PROPRIETARY NOTICE

This document discloses confidential subject matter in which MilesTek Corporation and its subsidiaries have proprietary rights. Neither receipt nor possession thereof confers or transfers any right to reproduce or disclose the document, any part thereof, any information contained therein, or any physical article or device, or to practice any method or process, except by written permission from, or written agreement with MilesTek Corporation and its subsidiaries.

T6A00008

A

REVISIONS

REV	DESCRIPTION	DATE	APPROVED
A	INITIAL RELEASE	4/23/18	D.FRISIELLO

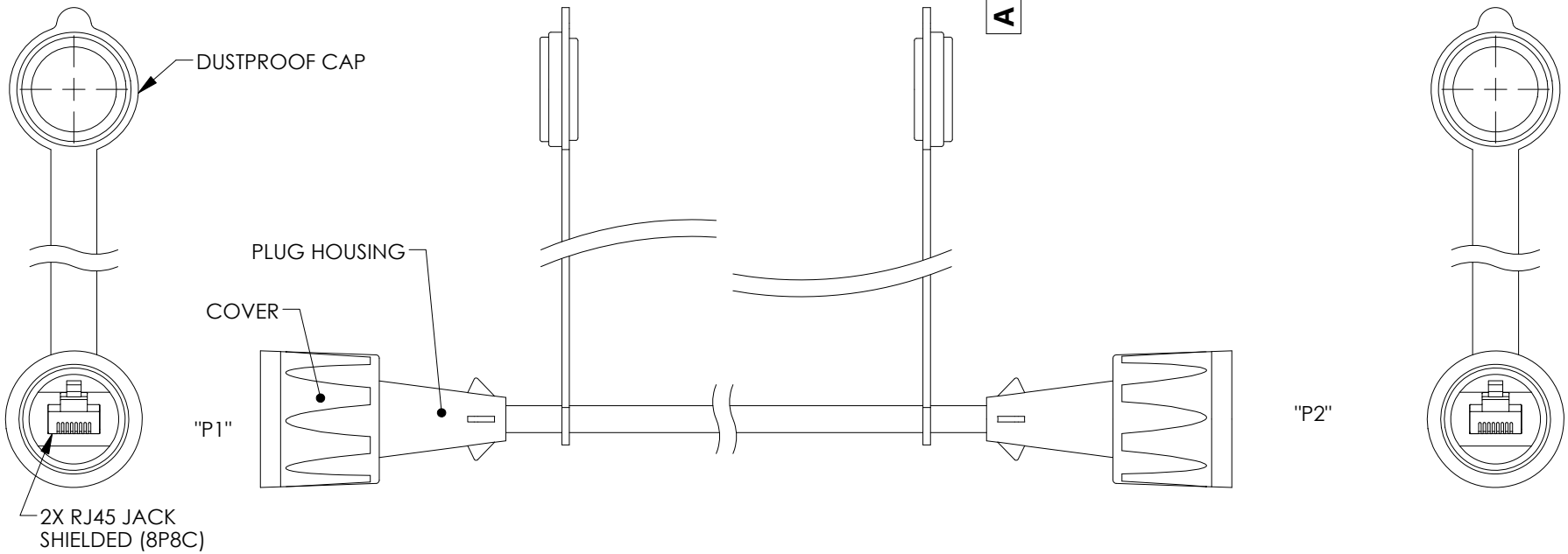

NOTES:

MATERIAL:
PLUG HOUSING AND COVER: PBT, BLACK
CONTACTS: PHOSPHOR BRONZE, C5191
DUSTPROOF CAP: PVC, BLACK
CABLE: PVC, BLACK

CABLE JACKET LEGEND:
TYPE CMX OUTDOOR 75˚ C <UL> E466489-D2
SHIELDED FOUR TWISTED PAIRS ETL VERIFIED TO
ANSI/TIA-568-C.2 PATCH CABLE FTP CAT 6, 26AWG
WITH ALUM/POLY FOIL TAPE AND DRAIN WIRE.

MISCELLANEOUS:
INSERTION LIFE: 750 CYCLES, MIN.
IP RATING: IP67 WHEN COVER IS ENGAGED.
OPERATING TEMPERATURE RANGE: -20°C TO +80°C.
STORAGE TEMPERATURE RANGE: -20°C TO +80°C.
HUMIDITY: 20% ~ 80% RH
CABLE ASSEMBLY TO BE TESTED FOR CONTINUITY.
CABLE ASSEMBLY SHALL BE INDIVIDUALLY PACKAGED IN ACCORDANCE WITH MILESTEK SPECIFICATION PS-0054.

REGULATORY COMPLIANCE:
CE2011/65/EU(RoHS DIRECTIVE)

MODEL NUMBER	LENGTH	
	METERS	FEET
T6A00008-1M	1.0	3.28
T6A00008-2M	2.0	6.56
T6A00008-3M	3.0	9.84
T6A00008-5M	5.0	16.41

WIRING MAP

P1	P2
1	1 WHT/ORN
2	2 ORN
3	3 WHT/GRN
6	6 GRN
5	5 WHT/BLU
4	4 BLU
7	7 WHT/BRN
8	8 BRN
SHIELD	SHIELD

NON CONTROLLED DRAWING IF PRINTED

AS9100C CERTIFIED | CAD SYSTEM DRAWING - DO NOT REVISE MANUALLY

DASH	NEXT ASSY	USED ON
APPLICATION		

UNLESS OTHERWISE SPECIFIED ALL DIMENSIONS ARE IN INCHES

OVERALL CABLE LENGTH TOLERANCE:
≤12 [305] = +1 [25] / -0
>12 [305] ≤60 [1524] = +2 [51] / -0
>60 [1524] ≤120 [3048] = +4 [102] / -0
>120 [3048] ≤300 [7620] = +6 [152] / -0
>300 [7620] = +5% / -0%

ALL OTHER DIMENSIONAL TOLERANCES:
.X = ± .2 [5.08]
.XX = ± .02 [.51]
.XXX = ±.005 [.13]

CUSTOMER REFERENCE DOCUMENT:

SIGNATURE	DATE
DRAWN BY: D.FRISIELLO	4/20/18
CHECKED BY: D.GUTTADAURO	4/23/18
APPROVED ENGINEERING: D.GUTTADAURO	4/23/18
APPROVED MANUFACTURING:	
CUSTOMER APPROVAL	

CAGE CODE: 4Z977

MilesTek
Military | Aerospace | Communications | Industrial
MILESTEK CORPORATION
1506 INTERSTATE 35 WEST
DENTON, TX 76207
PHONE: 866.524.1553
FAX: 940.591.7086

TITLE
RJ45 IP67 F/UTP C6 PUR BLK W/CAP

SIZE A | DRAWING NUMBER: T6A00008

SCALE: NTS | SHEET 1 OF 1