PROPRIETARY NOTICE

This document discloses confidential subject matter in which MilesTek Corporation and its subsidiaries have proprietary rights. Neither receipt nor possession thereof confers or transfers any right to reproduce or disclose the document, any part thereof, any information contained therein, or any physical article or device, or to practice any method or process, except by written permission from, or written agreement with MilesTek Corporation and its subsidiaries.

REVISIONS

REV	DESCRIPTION	DATE	APPROVED
A	REV A DRAWING RELEASED	11/01/2018	DFRISIELLO

WIRING MAP

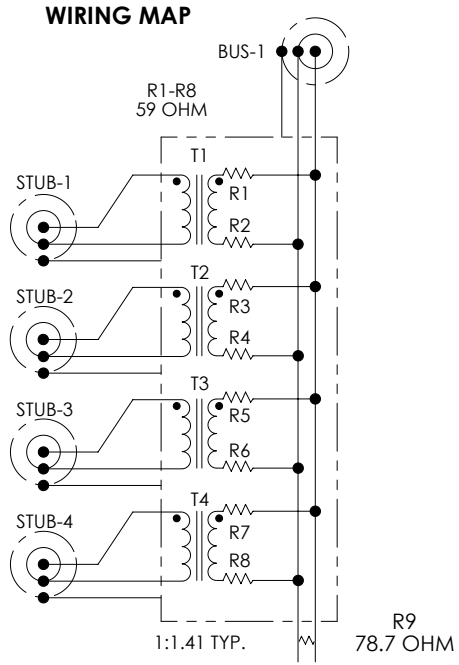

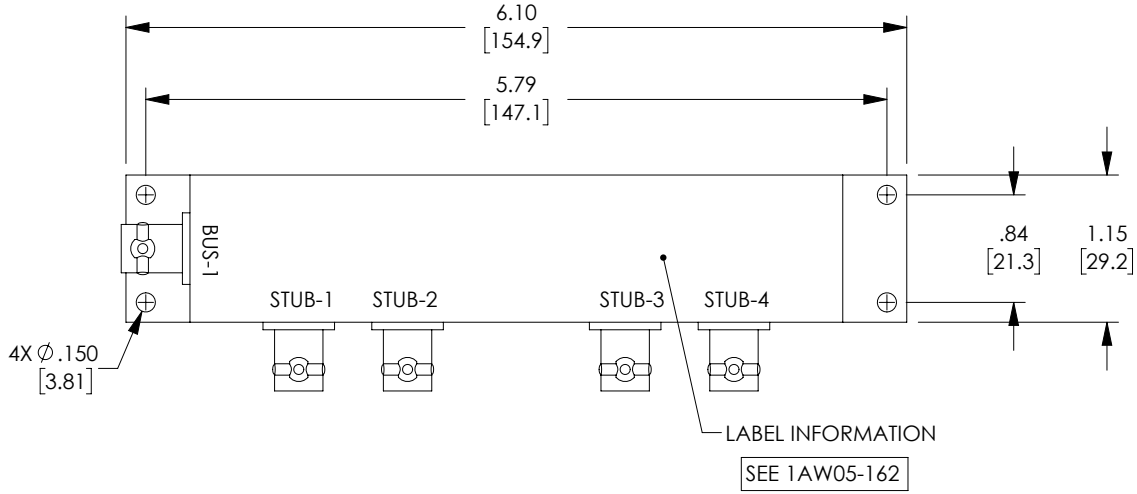

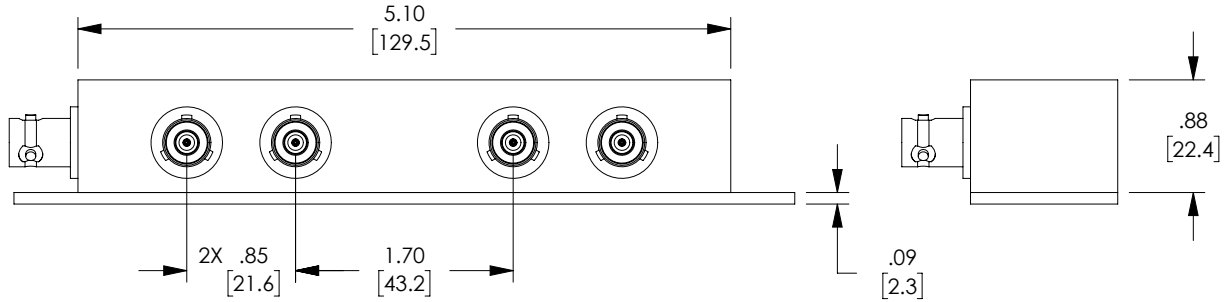

1.0 ELECTRICAL SPECIFICATIONS: IAW MIL-STD-1553B

1.1 DROOP	20% MAXIMUM
1.2 OVERSHOOT AND RINGING	+/- 1.0V PK-PK
1.3 TRANSFORMER RATIO	1:1.41 TURNS
1.4 FAULT PROTECTION	59 OHM +/-1%, 2 WATT PER MIL-R-39007
1.5 TERMINATING RESISTOR	78.7 OHM +/-1%, 2 WATT PER MIL-R-39007
1.6 COMMON MODE REJECTION	-55dB @ 1 MHz

2.0 MECHANICAL SPECIFICATIONS:

2.1 HOUSING: DIE CAST A360 ALUMINUM ALLOY
CLEAR ANODIZED AND PAINTED WITH TEXTURE.
BAKED ENAMEL, COLOR: BLUE
2.2 BASE PLATE: 6061-T6 ALUMINUM, SATIN FINISH.
2.3 CONNECTOR 10-06569 OR EQUIVALENT

3.0 ENVIRONMENTAL:

3.1 OPERATING TEMPERATURE: -55° C TO +125° C.

REGULATORY COMPLIANCE:

CE2011/65/EU(RoHS DIRECTIVE)

UNLESS OTHERWISE SPECIFIED ALL DIMENSIONS ARE IN INCHES

OVERALL CABLE LENGTH TOLERANCE:
≤12 [305] = +1 [25] / -0
>12 [305] ≤60 [1524] = +2 [51] / -0
>60 [1524] ≤120 [3048] = +4 [102] / -0
>120 [3048] ≤300 [7620] = +6 [152] / -0
>300 [7620] = +5% / -0%

ALL OTHER DIMENSIONAL TOLERANCES:
.X = ± .2 [5.08]
.XX = ± .02 [.51]
.XXX = ±.005 [.13]

CUSTOMER REFERENCE DOCUMENT:

	SIGNATURE	DATE
DRAWN BY:	DFRISIELLO	10/18/2018
CHECKED BY:	MHEARN	10/18/2018
APPROVED BY:	MHEARN	10/18/2018

CONFIGURATION DETAILS OF UNDIMENSIONED FEATURES MAY VARY

CAGE CODE: 4Z977

MilesTek
Military | Aerospace | Communications | Industrial

MILESTEK CORPORATION
301 LEORA LANE, SUITE 100
LEWISVILLE, TX 75056
PHONE: (940) 484-9400
FAX: (940) 566-1047

TITLE
ROHS 4 STUB LFT BUS COUPLER

SIZE: A
DRAWING NUMBER: MSX000018
REV.: A
SCALE: NTS
SHEET 1 OF 1