PROPRIETARY NOTICE

This document discloses confidential subject matter in which MilesTek Corporation and its subsidiaries have proprietary rights. Neither receipt nor possession thereof confers or transfers any right to reproduce or disclose the document, any part thereof, any information contained therein, or any physical article or device, or to practice any method or process, except by written permission from, or written agreement with MilesTek Corporation and its subsidiaries.

MSA00104-XXXN

A

REVISIONS

REV	DESCRIPTION	DATE	APPROVED
A	INITIAL RELEASE	06/30/17	J.YOU
B	ECN 8899: REVISE NOTE 1 TO NOTE 2, DESCR., TITLE, ADD DETAIL	9/7/17	D.FRISIELLO

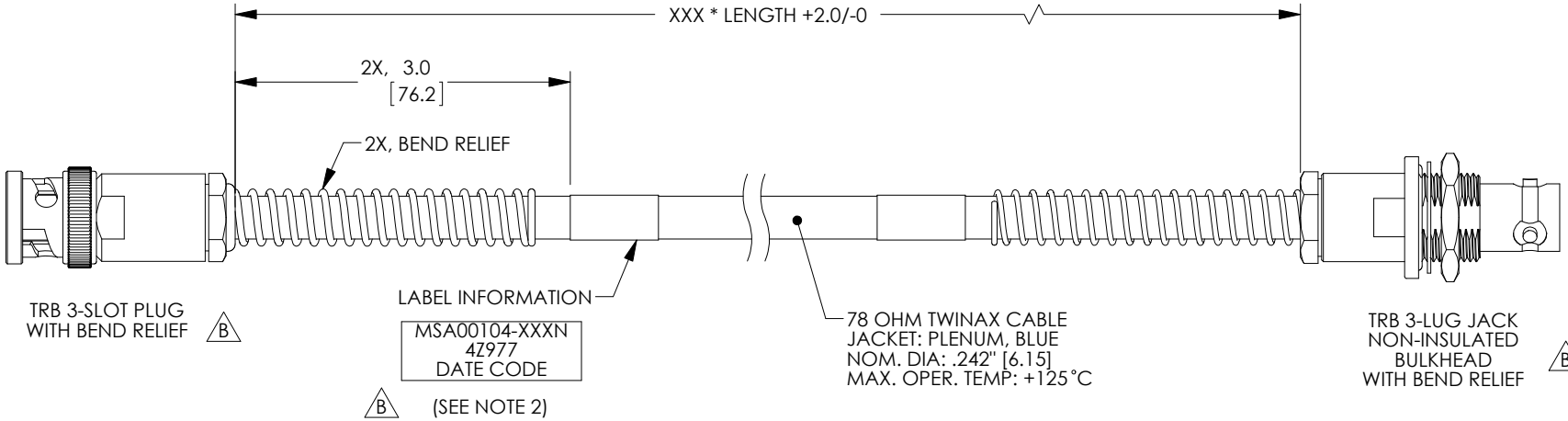

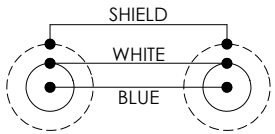

WIRING MAP

LENGTH CODE CHART		
CABLE # & LENGTH	LENGTH SYMBOL	EXAMPLES OF PART # USED
MSA00104-XXXN	WHERE XXX = LENGTH IN INCHES	MSA00104-12N (12.0 INCHES)

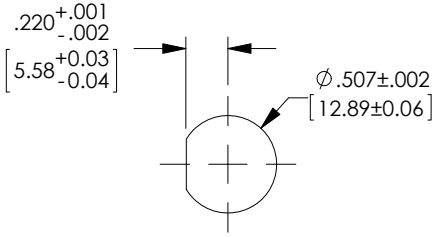

RECOMMENDED PANEL CUTOUT B

NOTES:

1. *XXX = LENGTH IN INCHES
2. CABLES 48" AND UNDER HAVE 1 LABEL CENTERED. CABLES OVER 48" HAVE 2 LABELS, ONE AT EACH END 3.0" FROM THE BACK OF THE CONNECTOR.
3. CABLE ASSEMBLY SHALL BE TESTED FOR CONTINUITY.

NON CONTROLLED DRAWING IF PRINTED B

AS9100C CERTIFIED | CAD SYSTEM DRAWING - DO NOT REVISE MANUALLY

DASH	NEXT ASSY	USED ON
APPLICATION		

UNLESS OTHERWISE SPECIFIED ALL DIMENSIONS ARE IN INCHES

OVERALL CABLE LENGTH TOLERANCE:
≤12 [305] = +1 [25] / -0
>12 [305] ≤60 [1524] = +2 [51] / -0
>60 [1524] ≤120 [3048] = +4 [102] / -0
>120 [3048] ≤300 [7620] = +6 [152] / -0
>300 [7620] = +5% / -0%

ALL OTHER DIMENSIONAL TOLERANCES:
.X = ± .2 [5.08]
.XX = ± .02 [.51]
.XXX = ±.005 [.13]

CUSTOMER REFERENCE DOCUMENT:

SIGNATURE	DATE
DRAWN BY: J.YOU	06/30/17
CHECKED BY: M.HEARN	06/30/17
APPROVED ENGINEERING: M.HEARN	06/30/17
APPROVED MANUFACTURING:	
CUSTOMER APPROVAL	

CAGE CODE: 4Z977

MilesTek®
MILESTEK CORPORATION
1506 INTERSTATE 35 WEST
DENTON, TX 76207
PHONE: 866.524.1553
FAX: 940.591.7086

TITLE: PLN TWNX PBR-NI BHJBR

SIZE: A | DRAWING NUMBER: MSA00104-XXXN

SCALE: NTS | SHEET 1 OF 1