PROPRIETARY NOTICE

This document discloses confidential subject matter in which MilesTek Corporation and its subsidiaries have proprietary rights. Neither receipt nor possession thereof confers or transfers any right to reproduce or disclose the document, any part thereof, any information contained therein, or any physical article or device, or to practice any method or process, except by written permission from, or written agreement with MilesTek Corporation and its subsidiaries.

MDA00030

A

REVISIONS

REV	DESCRIPTION	DATE	APPROVED
A	INITIAL RELEASE	06/08/17	J.YOU

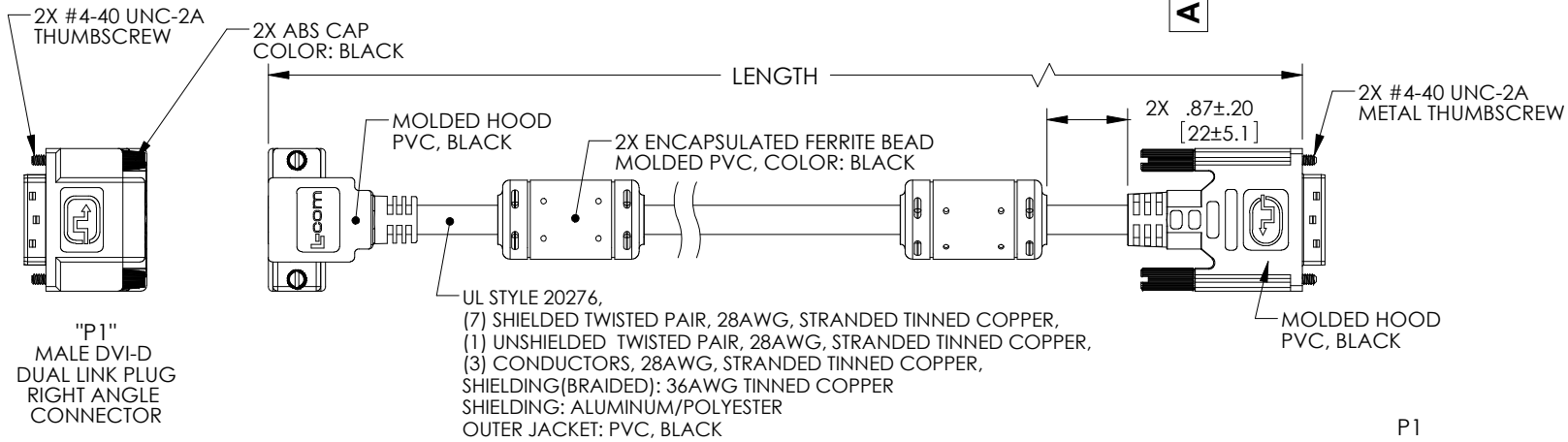

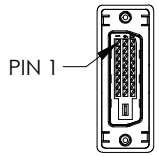

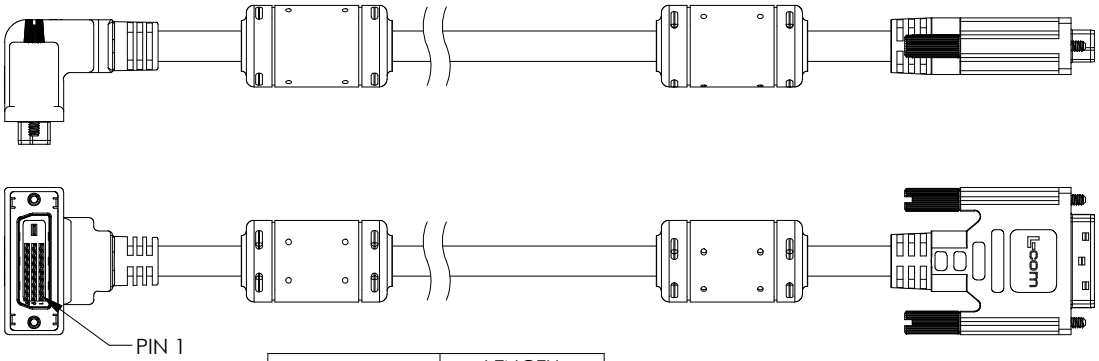

PART NUMBER	LENGTH	
	FEET	METERS
MDA00030-1F	1.0	[.30]
MDA00030-3F	3.0	[.91]
MDA00030-5F	5.0	[1.52]
MDA00030-10F	10.0	[3.05]
MDA00030-15F	15.0	[4.57]

WIRING MAP

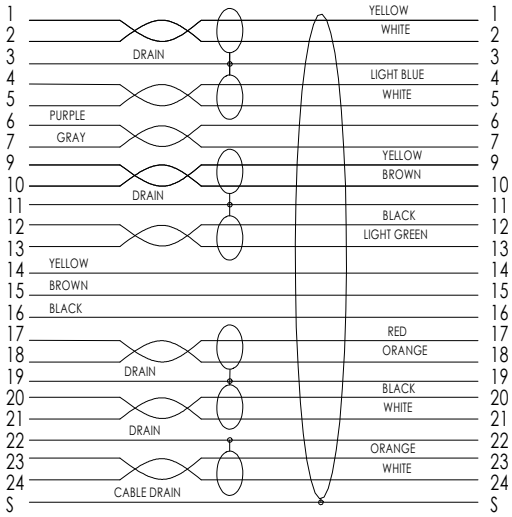

PIN 8: NO CONNECTION

NON CONTROLLED DRAWING IF PRINTED

NOTES:

1. CABLE ASSEMBLY TO BE TESTED FOR CONTINUITY
2. CABLE ASSEMBLY TO BE INDIVIDUALLY PACKAGED IN ACCORDANCE WITH SPEC. PS-0054.
3. DUST COVERS INSTALLED FOR SHIPPING (NOT SHOWN).

REGULATORY COMPLIANCE:
CE2011/65/EU(RoHS DIRECTIVE)

AS9100C CERTIFIED | CAD SYSTEM DRAWING - DO NOT REVISE MANUALLY

DASH	NEXT ASSY	USED ON
APPLICATION		

UNLESS OTHERWISE SPECIFIED ALL DIMENSIONS ARE IN INCHES

OVERALL CABLE LENGTH TOLERANCE:
≤12 [305] = +1 [25] / -0
>12 [305] ≤60 [1524] = +2 [51] / -0
>60 [1524] ≤120 [3048] = +4 [102] / -0
>120 [3048] ≤300 [7620] = +6 [152] / -0
>300 [7620] = +5% / -0%

ALL OTHER DIMENSIONAL TOLERANCES:
.X = ± .2 [5.08]
.XX = ± .02 [.51]
.XXX = ±.005 [.13]

CUSTOMER REFERENCE DOCUMENT:

SIGNATURE	DATE
DRAWN BY: J.YOU	06/08/17
CHECKED BY: B.GATES	06/08/17
APPROVED ENGINEERING: S.PAN	06/08/17
APPROVED MANUFACTURING:	
CUSTOMER APPROVAL	

CAGE CODE: 4Z977

MilesTek
Military | Aerospace | Communications | Industrial

MILESTEK CORPORATION
1506 INTERSTATE 35 WEST
DENTON, TX 76207
PHONE: 866.524.1553
FAX: 940.591.7086

TITLE
CBL DVI-D DL RA

SIZE A | DRAWING NUMBER: MDA00030

SCALE: NTS | SHEET 1 OF 1