PROPRIETARY NOTICE

This document discloses confidential subject matter in which MilesTek Corporation and its subsidiaries have proprietary rights. Neither receipt nor possession thereof confers or transfers any right to reproduce or disclose the document, any part thereof, any information contained therein, or any physical article or device, or to practice any method or process, except by written permission from, or written agreement with MilesTek Corporation and its subsidiaries.

CA-2375

A

REVISIONS

REV	DESCRIPTION	DATE	APPROVED
A	INITIAL RELEASE	3/25/16	D.GRIFFIN

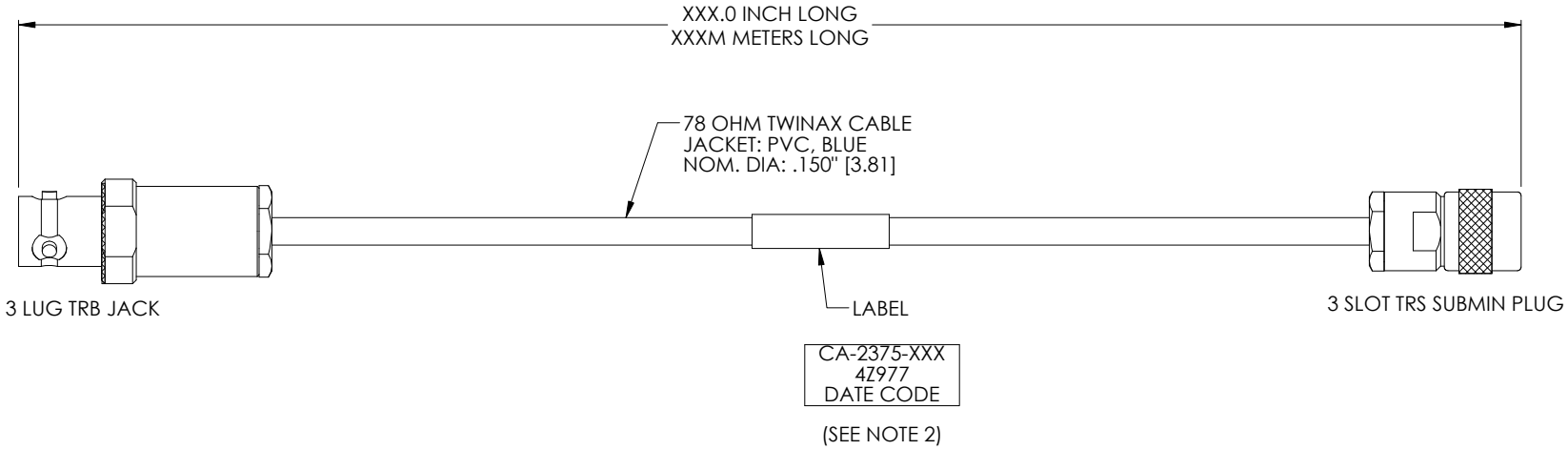

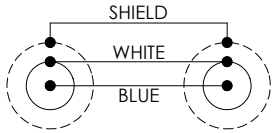

WIRING MAP

NOTES:

1. *XXX = LENGTH IN INCHES
   *XXXM = LENGTH IN METERS
2. CABLES 48" AND UNDER HAVE 1 LABEL CENTERED. CABLES OVER 48" HAVE 2 LABELS, ONE AT EACH END 3.0" FROM THE BACK OF THE CONNECTOR.
3. CABLE ASSEMBLY SHALL BE TESTED FOR CONTINUITY.

NON CONTROLLED DRAWING IF PRINTED

AS9100C CERTIFIED | CAD SYSTEM DRAWING - DO NOT REVISE MANUALLY

DASH	NEXT ASSY	USED ON

APPLICATION

UNLESS OTHERWISE SPECIFIED ALL DIMENSIONS ARE IN INCHES

OVERALL CABLE LENGTH TOLERANCE:
≤12 [305] = +1 [25] / -0
>12 [305] ≤60 [1524] = +2 [51] / -0
>60 [1524] ≤120 [3048] = +4 [102] / -0
>120 [3048] ≤300 [7620] = +6 [152] / -0
>300 [7620] = +5% / -0%

ALL OTHER DIMENSIONAL TOLERANCES:
.X = ± .2 [5.08]
.XX = ± .02 [.51]
.XXX = ±.005 [.13]

CUSTOMER REFERENCE DOCUMENT:

SIGNATURE	DATE
DRAWN BY: D. DESJARDIN	3/24/16
CHECKED BY: M. HEARN	3/24/16
APPROVED ENGINEERING: M. HEARN	3/24/16
APPROVED MANUFACTURING:	
CUSTOMER APPROVAL	

CAGE CODE: 4Z977

MilesTek®
MILESTEK CORPORATION
1506 INTERSTATE 35 WEST
DENTON, TX 76207
PHONE: 866.524.1553
FAX: 940.591.7086

TITLE
CA TWX TRB-TRS J-P LAB

SIZE A | DRAWING NUMBER: CA-2375

SCALE: NTS | SHEET 1 OF 1