PROPRIETARY NOTICE

This document discloses confidential subject matter in which MilesTek Corporation and its subsidiaries have proprietary rights. Neither receipt nor possession thereof confers or transfers any right to reproduce or disclose the document, any part thereof, any information contained therein, or any physical article or device, or to practice any method or process, except by written permission from, or written agreement with MilesTek Corporation and its subsidiaries.

MSA00005

A

REVISIONS

REV	DESCRIPTION	DATE	APPROVED
A	INITIAL RELEASE	6/19/17	D.FRISIELLO

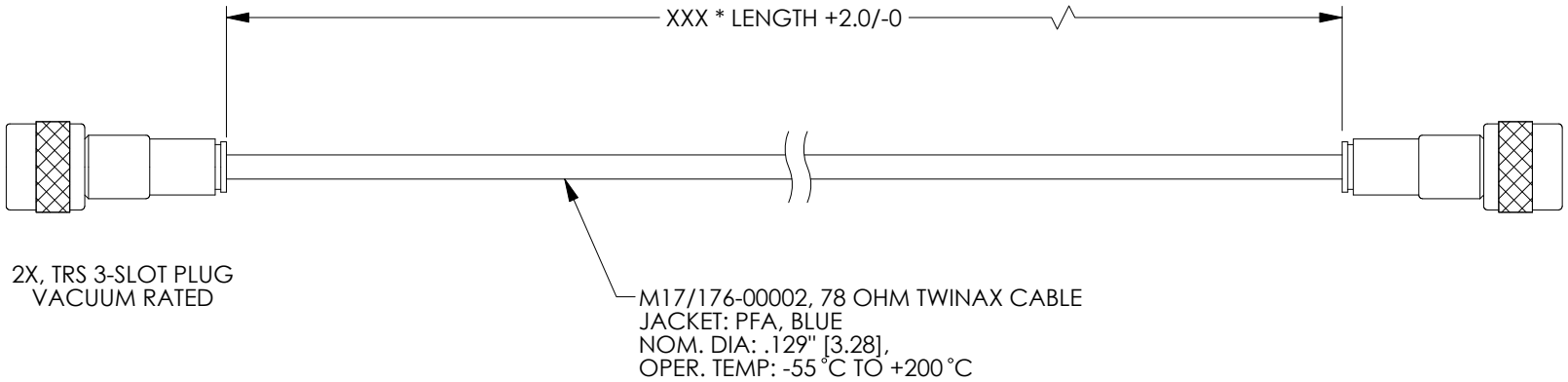

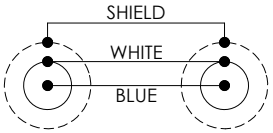

WIRING MAP

LENGTH CODE CHART		
CABLE # & LENGTH	LENGTH SYMBOL	EXAMPLES OF PART # USED
MSA00005-XXN	WHERE XXX = LENGTH IN INCHES	MSA-00005-12N (12.0 INCHES)

NOTES:

1. *XXX = LENGTH IN INCHES
2. CONNECTORS ARE DESIGNED AND MANUFACTURED WITH MATERIALS THAT MEET THE TML (TOTAL MASS LOSS) OR OUT GASSING REQUIREMENTS OF NASA.
3. NO LABELS ALLOWED ON THIS CABLE ASSEMBLY.
4. CABLE ASSEMBLY SHALL BE TESTED FOR CONTINUITY.

REGULATORY COMPLIANCE:
CE2011/65/EU(RoHS DIRECTIVE)

NON CONTROLLED DRAWING IF PRINTED

AS9100C CERTIFIED | CAD SYSTEM DRAWING - DO NOT REVISE MANUALLY

DASH	NEXT ASSY	USED ON
APPLICATION		

UNLESS OTHERWISE SPECIFIED ALL DIMENSIONS ARE IN INCHES

OVERALL CABLE LENGTH TOLERANCE:
≤12 [305] = +1 [25] / -0
>12 [305] ≤60 [1524] = +2 [51] / -0
>60 [1524] ≤120 [3048] = +4 [102] / -0
>120 [3048] ≤300 [7620] = +6 [152] / -0
>300 [7620] = +5% / -0%

ALL OTHER DIMENSIONAL TOLERANCES:
.X = ± .2 [5.08]
.XX = ± .02 [.51]
.XXX = ±.005 [.13]

CUSTOMER REFERENCE DOCUMENT:

SIGNATURE	DATE
DRAWN BY: D.FRISIELLO	6/14/17
CHECKED BY: M.HEARN	6/19/17
APPROVED ENGINEERING: M.HEARN	6/19/17
APPROVED MANUFACTURING:	
CUSTOMER APPROVAL	

CAGE CODE: 4Z977

MilesTek
Military | Aerospace | Communications | Industrial

MILESTEK CORPORATION
1506 INTERSTATE 35 WEST
DENTON, TX 76207
PHONE: 866.524.1553
FAX: 940.591.7086

TITLE
CA VACUUM TRS-TRS P-P

SIZE A | DRAWING NUMBER: MSA00005

SCALE: NTS | SHEET 1 OF 1