PROPRIETARY NOTICE

This document discloses confidential subject matter in which MilesTek Corporation and its subsidiaries have proprietary rights. Neither receipt nor possession thereof confers or transfers any right to reproduce or disclose the document, any part thereof, any information contained therein, or any physical article or device, or to practice any method or process, except by written permission from, or written agreement with MilesTek Corporation and its subsidiaries.

FYB00008

A

REVISIONS

REV	DESCRIPTION	DATE	APPROVED
A	INITIAL RELEASE	07/19/17	J.YOU

ITEM NO	DESCRIPTION	QTY
1	COLLAR NUT	1
2	LC CONNECTOR	2
3	LC CONNECYOR HOUSING	1
4	COMPRESSION SEAL	1
5	O-RING	1
-	POLY BAG	1
-	CARTON	1/20
-	INSTRUCTION	1/20

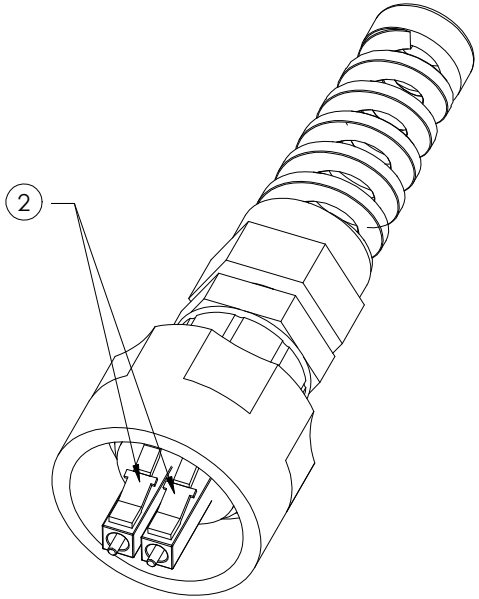

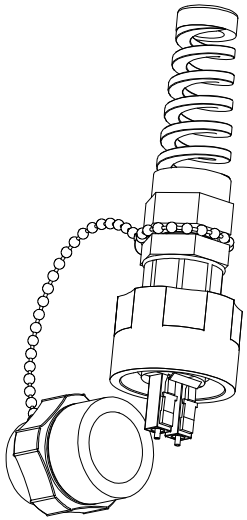

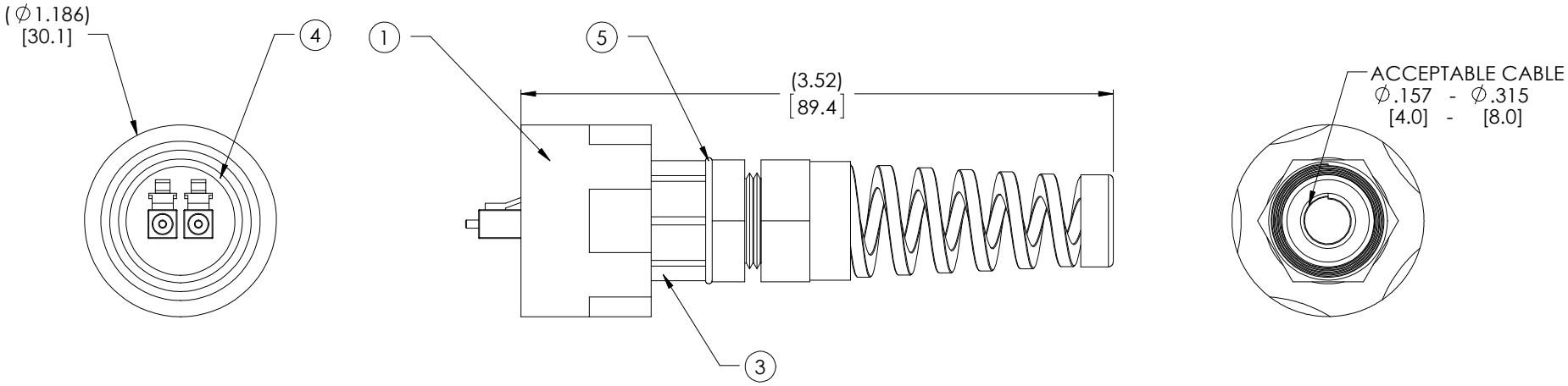

NOTES:

1. MATERIAL: COLLAR NUT, CONNECTOR HOUSING - GLASS FILLED PBT.
2. FOR MORE INFORMATION, CONTACT A SIEMON CUSTOMER SERVICE REPRESENTATIVE.
3. LC PLUG ACCEPTS SINGLE MODE, ROUND BREAK OUT STYLE FIBER.
4. FIBER OPTICS TO BE INDIVIDUALLY PACKAGED IN ACCORDANCE WITH SPEC. PS-0054.

REGULATORY COMPLIANCE:
CE2011/65/EU(RoHS DIRECTIVE)

NON CONTROLLED DRAWING IF PRINTED

AS9100C CERTIFIED | CAD SYSTEM DRAWING - DO NOT REVISE MANUALLY

DASH	NEXT ASSY	USED ON
APPLICATION		

UNLESS OTHERWISE SPECIFIED ALL DIMENSIONS ARE IN INCHES

OVERALL CABLE LENGTH TOLERANCE:
≤12 [305] = +1 [25] / -0
>12 [305] ≤60 [1524] = +2 [51] / -0
>60 [1524] ≤120 [3048] = +4 [102] / -0
>120 [3048] ≤300 [7620] = +6 [152] / -0
>300 [7620] = +5% / -0%

ALL OTHER DIMENSIONAL TOLERANCES:
.X = ± .2 [5.08]
.XX = ± .02 [.51]
.XXX = ±.005 [.13]

CUSTOMER REFERENCE DOCUMENT:

SIGNATURE	DATE
DRAWN BY: J.YOU	07/19/17
CHECKED BY: D.GUTTADAURO	07/19/17
APPROVED ENGINEERING: S.PAN	07/19/17
APPROVED MANUFACTURING:	
CUSTOMER APPROVAL	

CAGE CODE: 4Z977

MilesTek
Military | Aerospace | Communications | Industrial

MILESTEK CORPORATION
1506 INTERSTATE 35 WEST
DENTON, TX 76207
PHONE: 866.524.1553
FAX: 940.591.7086

TITLE
INDUSTRIAL DUPLEX LC CNCTOR SM

SIZE A | DRAWING NUMBER: FYB00008

SCALE: NTS | SHEET 1 OF 1